Contents

1. Purpose....1
2. Scope....2
3. Definitions and abbreviations....2
4. Description....2
4.1. Introduction....2
4.1.1. Hierarchical approach....3
4.2. Example....4
4.3. Test mode initialization....6
4.4. TMR_ANA....6
4.4.1. Structure....6
4.4.2. Design considerations....10
4.4.3. Naming conventions....11
4.5. TMR_SEL, TMR_VAL....11
4.5.1. Structure....11
4.5.2. Design considerations....12
4.5.3. Naming conventions....12
4.6. TMR_OUT....12
4.6.1. Structure....12
4.6.2. Design considerations....14
4.6.3. Naming conventions....14
4.7. TMR_IN....15
4.7.1. Structure....15
4.7.2. Design considerations....15
4.7.3. Naming conventions....16
4.8. TMR_DIG....16
4.8.1. Structure....16
4.8.2. Design considerations....16
4.8.3. Naming conventions....17
5. Work safety / emergency instructions....17
6. Documentation....17
7. Related documents....17
8. Appendix....17

1. Purpose

The aim of this work instruction is to describe common test register structures that have to be used for new projects and standard cells, independently of the physical interface (JTAG, SWD) itself. Beside the digital register structure, the method has implications for the analog part, too. The analog circuitry is also described in this document.

When using same register types within each project or IP, it is easy to distribute blocks to other projects with high reuse factor. Additionally, the same kind of registers and naming conventions help to establish a common understanding of DfT feature realizations across all projects at ELMOS.

So the intention of this work instruction is not:

Describe rules how to implement DFT features exactly.

Elmos internal copy by ASON

ELMOS CONFIDENTIAL - created by ASON on 2026-02-05 11:20 - no redistribution allowed

But the intention is:

Provide a unique DFT usage concept to create a common base for best reuse practice.

- DFT features e.g. test mode registers are part of a functional block
- Naming conventions are defined and must be used
- Usage of test mode register types is established
- Analog considerations
- Standard cells will use this approach, so they can be integrated easily into projects

This document clearly differentiates between mandatory rules, recommendations and best practice hints.

2. Scope

To be used in all ELMOS designs and test programs.

3. Definitions and abbreviations

A2D	- Analog to Digital
ADC	- Analog to Digital Converter
ATB, ATBUS	- Analog Test Bus
D2A	- Digital to Analog
DFT	- Design For Test
EDF	- Electronic Development Flow
GPIO	- General Purpose Input Output
HV	- High Voltage, used for supply voltage interfaces (e.g. 12 V and higher)
JTAG	- Test interface defined by Joint Test Access Group
LV	- Low Voltage, used for the digital core
MV	- Medium Voltage, used for analog circuitry (typically 5V)
POR	- Power On Reset
SWD	- Serial Wire Debug Interface for ARM processor
TMR	- Test Mode Register

Symbol	***Explanation***
Mandatory Rule	**A rule that must be followed**
Recommendation	*An advice, that may be ignored in substantiated cases*

4. Description

4.1.Introduction

The basic idea behind the TMR (Test Mode Register) structure is to have a set of registers instead of having predefined test modes which enables a unified structure and understanding as well as high flexibility. Figure 2 introduces the 4 main kinds of test mode registers and the basic idea behind.

Note, that all the figures show two analog test buses, due to the fact, that an analog cell needs an analog stimulus and provides an analog output to be evaluated. However, two buses are not mandatory, as there are cases, where the package provides only one analog test bus pad. In this case functional signal

Elmos internal copy by ASON

ELMOS CONFIDENTIAL - created by ASON on 2026-02-05 11:20 - no redistribution allowed

routes can be used (e.g. the analog output can be evaluated via the ADC, as in the application).

! Therefore standard cells must not rely on the existence of two analog test buses.

TMR	Description
TMR_SEL, TMR_VAL	Control interface between analog and digital block which is also used in the application in both directions. Please note that the interface means simple digital control lines or buses, no converters.
TMR_ANA	Control of analog switches and signals, e.g. connect analog signals to Analog Test Bus (ATB) which are only used in test mode
TMR_DIG	Control behavior of digital part or several signals
TMR_OUT	Control digital output MUX, connect signals to digital outputs. Note: This Test Mode Register type was previously often called TMR_ONE.
TMR_IN	Control digital input MUX, force signals from digital inputs

4.1.1.Hierarchical approach

The TMR registers are normally part of a functional block. They are not combined with a separate test logic block on top level of the device.
So a modular re-use unit consists of:

- The analog circuitry
- The digital part of this block including application registers
- DFT features like test switches
- Test mode registers

These elements are combined as design elements and they are part of one block within the EDF. This block will also contain the test concept, test modes etc.

One example for this Re-Use Unit: LIN-AA+

Elmos internal copy by ASON

ELMOS CONFIDENTIAL - created by ASON on 2026-02-05 11:20 - no redistribution allowed

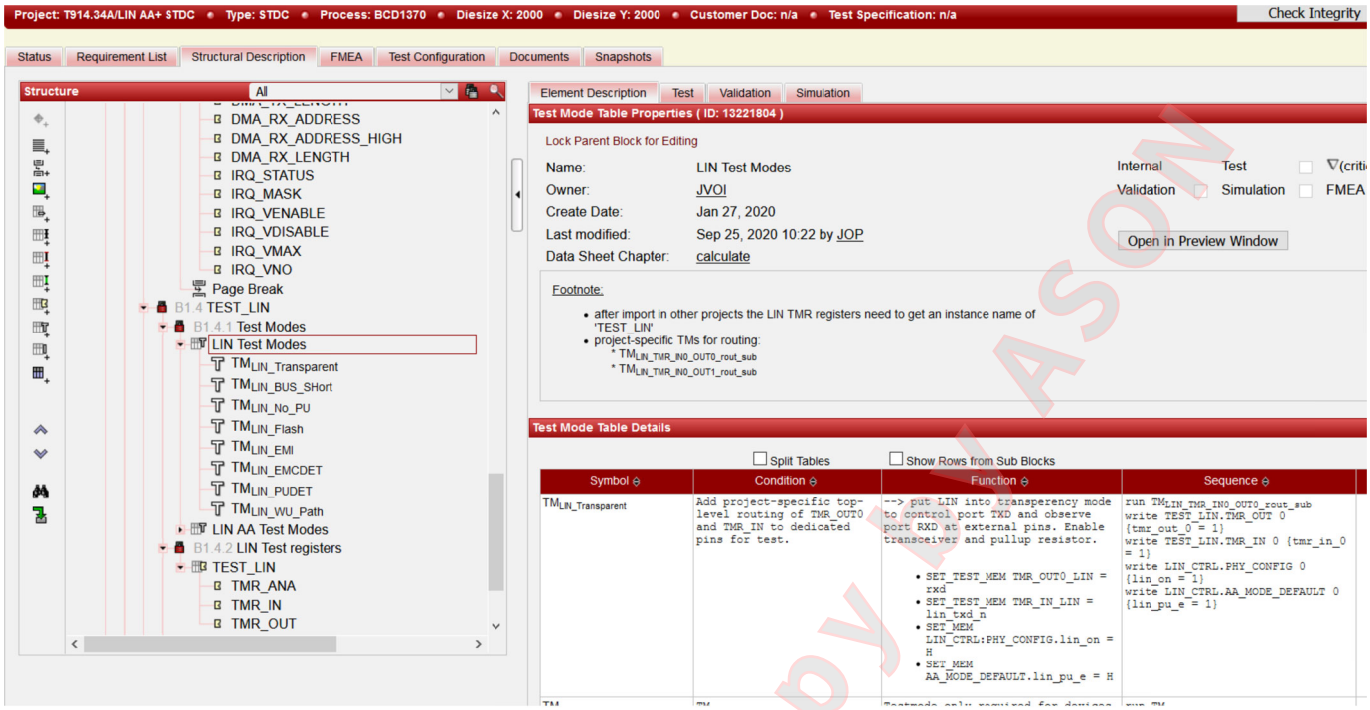

Figure 1: EDF screenshot of LIN AA+ cell

This standard cell contains any parameter, digital description, application registers, test mode registers and the setting defined as test mode.
The integration into a project is supported easily. To fulfill the DFT integration rules the design team has to:

- connect the Block-ATB to the Chip ATB
- Route digital test output and input to device GPIOs

The setup of the block during ATE test is defined by the competence center and inherited into the project.

4.2.Example

Figure 2 gives an example of how the different types of test mode registers have to be used for providing full test access to an internal comparator.

Elmos internal copy by ASON

ELMOS CONFIDENTIAL - created by ASON on 2026-02-05 11:20 - no redistribution allowed

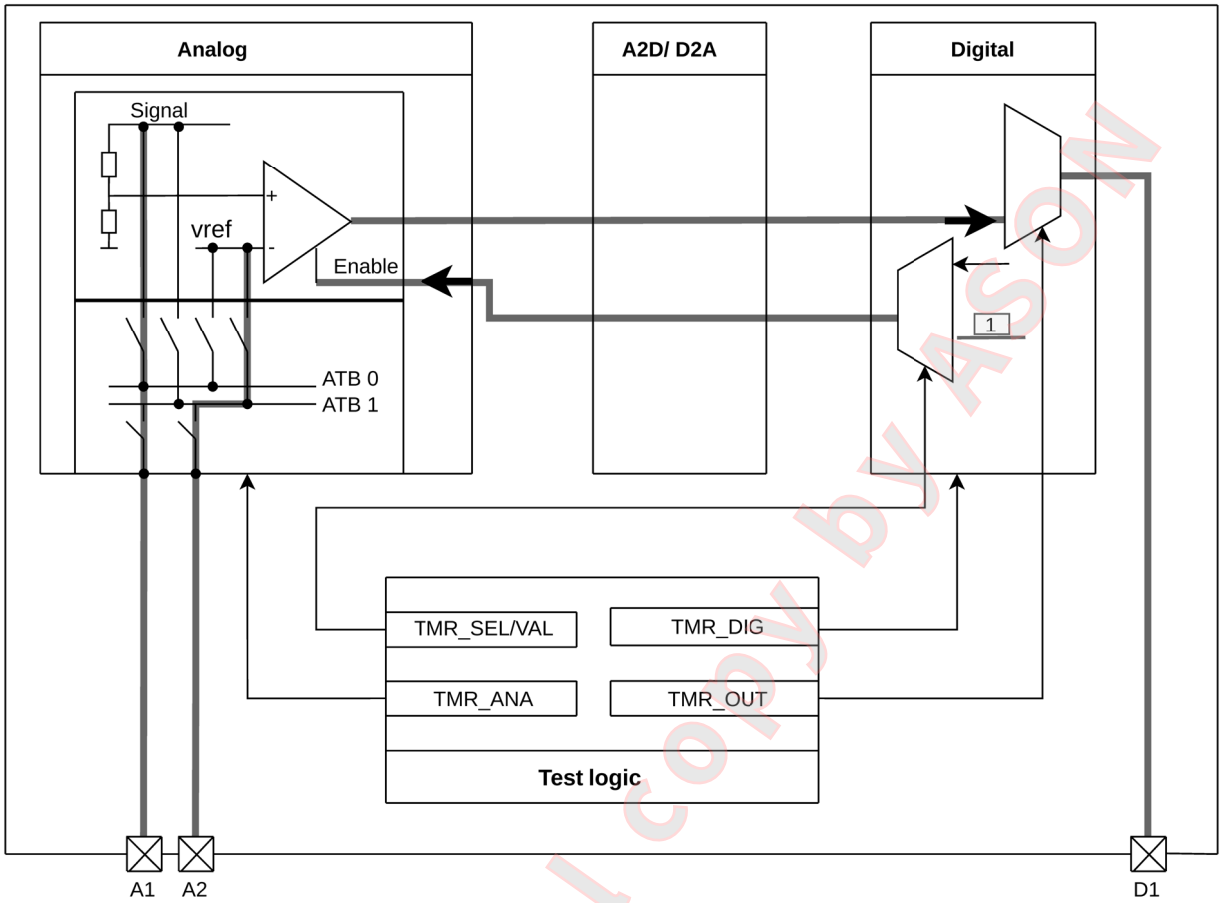

Figure 2: TMR example: test access to internal comparator

TMR	Description
TMR_SEL, TMR_VAL	Control comparator enable signal, set to static value ‘1’ independently of real behavior from digital logic. Remark: TMR_IN might be used instead.
TMR_ANA	Connect analog node “signal” to port A1 via ATB0 to force value externally. Connect analog node “vref” to port A2 via ATB1 to measure voltage level externally.
TMR_DIG	No specific behavior of digital part required for this test concept.
TMR_OUT	Connect comparator output to D1 for external observation.
TMR_IN	Not used here, but one input pin might also be used to enable the comparator (instead of using the TMR SEL/VAL mechanism).

Elmos internal copy by ASON

ELMOS CONFIDENTIAL - created by ASON on 2026-02-05 11:20 - no redistribution allowed

4.3.Test mode initialization

Independently of the TMR structure described within this document, known requirements regarding test mode access are untouched and have to be considered:

- The test mode must be enabled during production test easily and securely.
- Within application any unwanted activation of the test mode must be prohibited, especially during startup-phase considering any POR release scenario.

4.4.TMR_ANA

4.4.1.Structure

TMR_ANA is the register naming for setting switches within a well defined Analog Test Bus structure (ATB) or special modes inside an analog block (e.g. apply internal load to a regulator, apply gate stress or change to oscillation mode of an internal timer).

Elmos internal copy by ASON

ELMOS CONFIDENTIAL - created by ASON on 2026-02-05 11:20 - no redistribution allowed

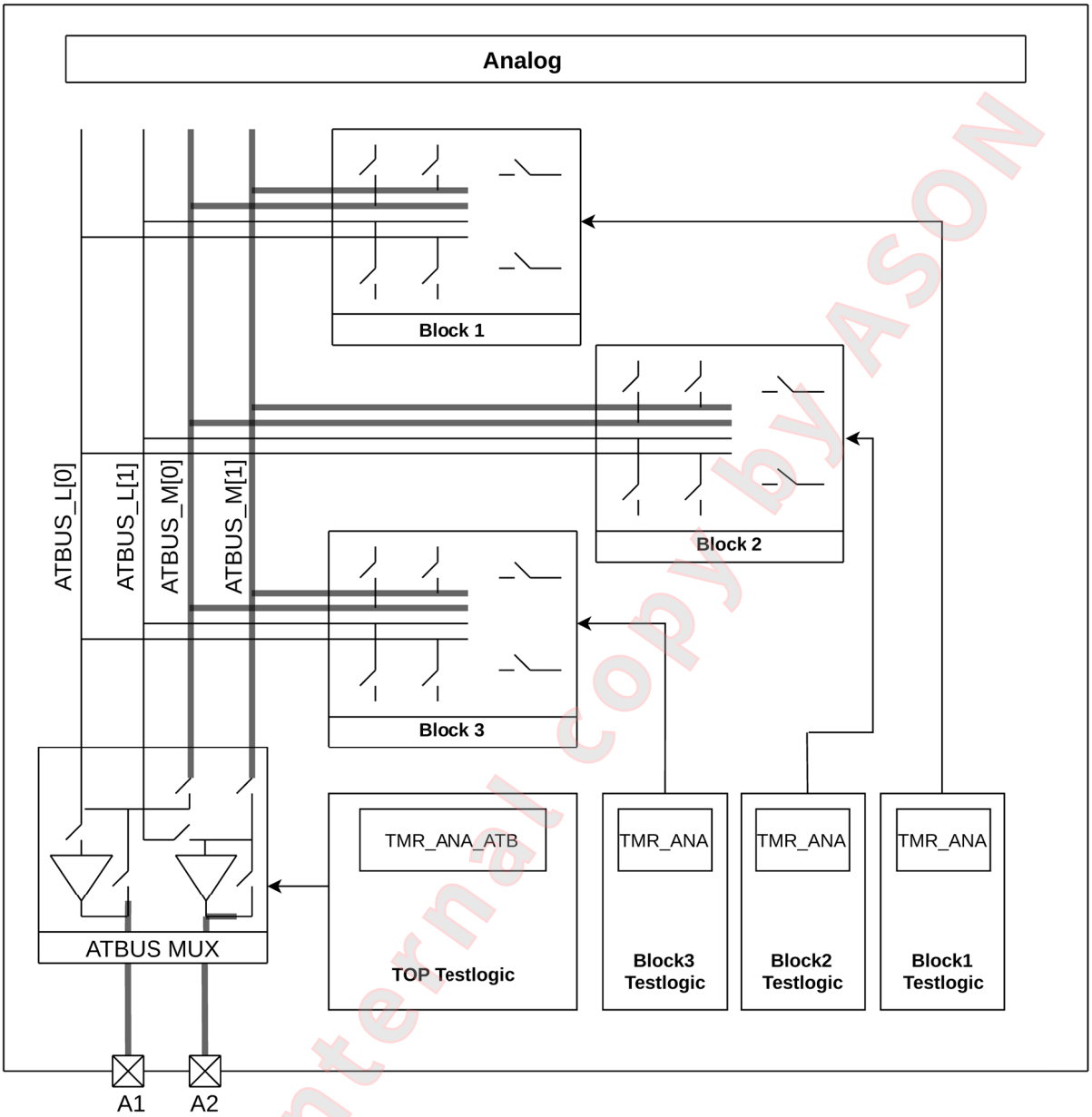

Figure 3: TMR_ANA structure

The structure within a device should be designed the following way:

- There should be one ATB for forcing signals and one for sensing signals connected to each block inside the design. In case forcing and sensing is not needed simultaneously, it is also possible to have only one connection to one ATB. The total number of ATBs is not predefined, but it is recommended to have at least two. In case of only one ATB, please check the test concept and architecture of the standard cells carefully
- Each module can connect signals to these bus lines. The required switches are part of the block itself.
- Each switch within this ATB structure (global or within each module) is set with one single bit, so full flexibility can be achieved. No fix coding of a dedicated ATB setup is allowed.
- All ATB switches must be controlled by test logic, each module uses own test mode registers for setting the ATB connectivity.

Elmos internal copy by ASON

ELMOS CONFIDENTIAL - created by ASON on 2026-02-05 11:20 - no redistribution allowed

- Devices with MV part usually have two additional MV ATB bus lines (ATBUS_M[1:0]) to connect signals with levels above the low voltage range.
- If useful within a design, also more than 2+2 ATB bus lines may be implemented.
- The ATB buses are connected to external pins using a standardized MUX structure, see Figure 4
- Other test switches within an analog block should be set using this TMR_ANA register structure to combine analog test conditions and ATB switches.
- The voltage range for the LV and MV busses strongly depend on the selected technology. MV is related to the core voltage, MV typically corresponds to the IO voltage. Real HV signals are not considered within the ATB concept and must be divided to match into the voltage range limits.

Note, that there are cases, where multiple test buses are preferred, like in big ICs, where the capacitive load of a single long bus is not accepted. There are also cases, where the 2+2 buses are merged together to two buses, resulting in MV test buses. Also the LV signals are connected by MV switches in that case. The final simplification occurs, when there is no need for the output MV test bus, as the applicational ADC is used to measure the output.

In any case, make sure, that any analog signal is within the supply range of the corresponding ATB switches under all conditions beside normal operation. Typical cases are:

- power-up/down
- sleep mode
- test modes with special voltages like SHOVE, low-voltage scan test, supply comparator tests (supply voltage ramps).

The key consideration is to have an input signal distributor and an output signal collector, which have standardized switch signal naming conventions. The term “multiplexer” is not used, as an input signal might be simultaneously distributed to multiple blocks. In the analog part sometimes there is need to buffer signals, so a bypassable analog buffer (which can be characterized for its own) is also part of the concept.

Again, cells must not rely on the existence of a buffer, they must however specify driving and load impedance ranges in their recommended operating conditions.

Technology	LV range	MV range
ELMOS L035	3.3 V	5.0 V
ELMOS S035	3.3 V	5.0 V
ELMOS D035	3.3 V	3.3V
TSMC CE018	1.8 V	3.3 V
TSMC CM018	1.8 V	3.3 V
TSMC CV018	1.8 V	5.0 V
Samsung BCD 1370	1.5 V	5.0 V

Elmos internal copy by ASON

ELMOS CONFIDENTIAL - created by ASON on 2026-02-05 11:20 - no redistribution allowed

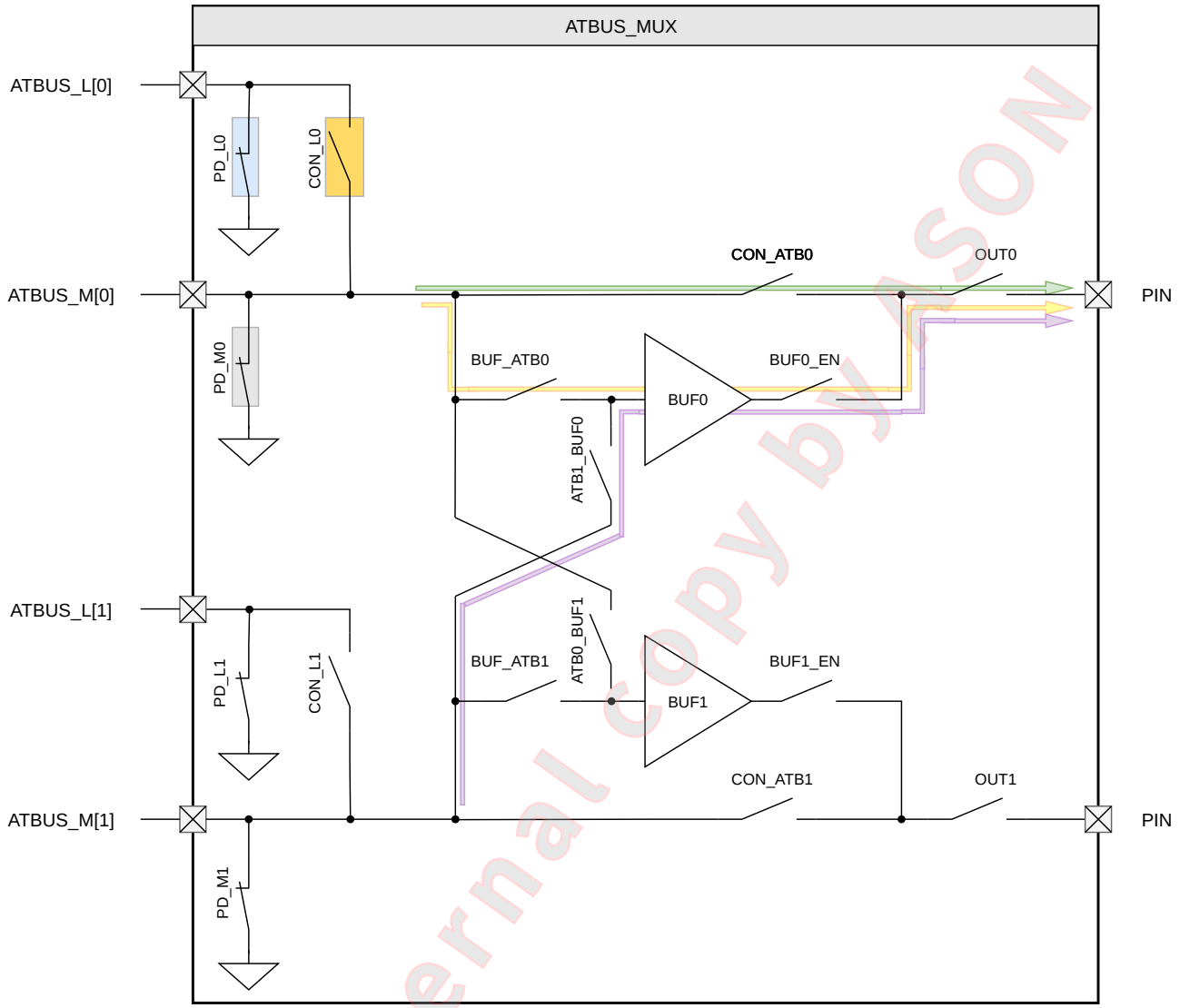

Figure 4: ATB MUX structure

Remark to Figure 4: Colors are valid for both analog test buses, but drawn for ATB0 only. They are referenced in the register table TMR_ANA_ATB.

The standardized ATB MUX structure contains:

- Buffers for optional usage at very high ohmic signals
- Cross-Feedback switching possibility for measuring the buffer offset
- Switches to connect the structure to the ATB bus lines and to the external pins
- Switches to ground the internal signals when they are unused.

Switches to ground must be closed when ATB is not used, especially when device is not in test mode!

Note: If you plan to have only one or no buffer at the ATB, please make sure that all needed signals can be measured at the ATE with its load conditions.

Note: In case you have an ADC it is also possible to use the ADC input multiplexer as part of the ATB structure. Please also consider the option to use the ADC buffer as ATB buffer and the ADC itself for the measurement. In this case, applicative registers have to be modified by test sequences. See also chapter 4.5.2.

Elmos internal copy by ASON

ELMOS CONFIDENTIAL - created by ASON on 2026-02-05 11:20 - no redistribution allowed

For controlling the global ATB_MUX structure one test mode register for each analog testbus is available containing following bits:

TMR_ANA_ATB0

Bit	Name	Switches to be addressed (see Figure 4)
0	con_atblv0	Close CON_L0
1	con_atb0	Close CON_ATB0, OUT0
2	con_atb0_buf	Close BUF_ATB0, BUF0_EN, OUT0
3	con_atb0_buf1	Close ATB0_BUF1, BUF1_EN, OUT1
4	discon_atb0_pd(*)	Open PD_M0
5	discon_atblv0_pd(*)	Open PD_L0

(*) Disconnect pulldown path at ATB, switch must be closed as default.

TMR_ANA_ATB1

Bit	Name	Switches to be addressed (see Figure 4)
0	con_atblv1	Close CON_L1
1	con_atb1	Close CON_ATB1, OUT1
2	con_atb1_buf	Close BUF_ATB1, BUF1_EN, OUT1
3	con_atb1_buf0	Close ATB1_BUF0, BUF0_EN, OUT0
4	discon_atb1_pd(*)	Open PD_M1
5	discon_atblv1_pd(*)	Open PD_L1

4.4.2.Design considerations

It has to be assured, that any applicative circuit (pull-down, driver stages etc.) at the selected ATB output pins may surely be switched off by applicative registers. Otherwise additional switches have to be implemented to assure this.

This highly flexible modular approach improves re-usability and enables a huge amount of possible test setups. On the other hand, it provides the risk of connecting signals internally which might lead to unwanted currents or even to pre-damage some structures. Therefore, some analog design rules must be considered to reduce the risk accordingly.

Most of the ATB sources have only small driving strength and therefore do not cause any pre-damage risk in case of wrong connections. Low impedance sources with an unwanted connection at the ATB may cause stress or even damage to the source itself and the connecting switch(es). To prevent this, please consider the following points:

1. Find low impedance sources of the ATB in the design (e.g. regulator/buffer outputs, temperature sensor, applicative pin drivers).
2. Insert series resistance to reduce the current in error case, if possible.
3. Increase the size of the switches to reduce the power dissipation per area in the error case.
4. Insert a second enable condition to this switch to reduce the risk of an accidental connection.

Furthermore, for the implementation of the ATB switches, consider the use of T-switches to reduce coupling between the signals.

Elmos internal copy by ASON

ELMOS CONFIDENTIAL - created by ASON on 2026-02-05 11:20 - no redistribution allowed

4.4.3.Naming conventions

The register names should follow useful naming conventions to ease the finding in different projects and have a common understanding in different projects.
Therefore the rules used and described within this document follow the common ELMOS rules regarding register definition and naming conventions. These rules are defined in confluence:
https://confluence.elmos.de/x/b_3gAg

Each block which makes use of analog test registers shall have registers with the following names: TMR_ANA_<*Subblock*>.
<*Subblock*> is optional and the label stands for subblock names within a module. <Subblock> naming shall be used whenever splitting up TMR_ANA increases clarity.

There is also a global register TMR_ANA_ATB which is used to set global switches being used in the ATB-MUX. The content is described above.
Bitfields matching to a signal or bus shall have a meaningful naming.

TMR_ANA registers are also allowed in TOP testlogic if no digital counterpart is useful for an analog block.

The signal name should also be used inside the analog schematic for easy debugging. The signal name may be equal to the bitfield name or may also be TMR_ANA_<Subblock>[Bit_No].

4.5.TMR_SEL, TMR_VAL

4.5.1.Structure

TMR_SEL, TMR_VAL describes the test logic behavior at the interface between analog and digital block within each module.

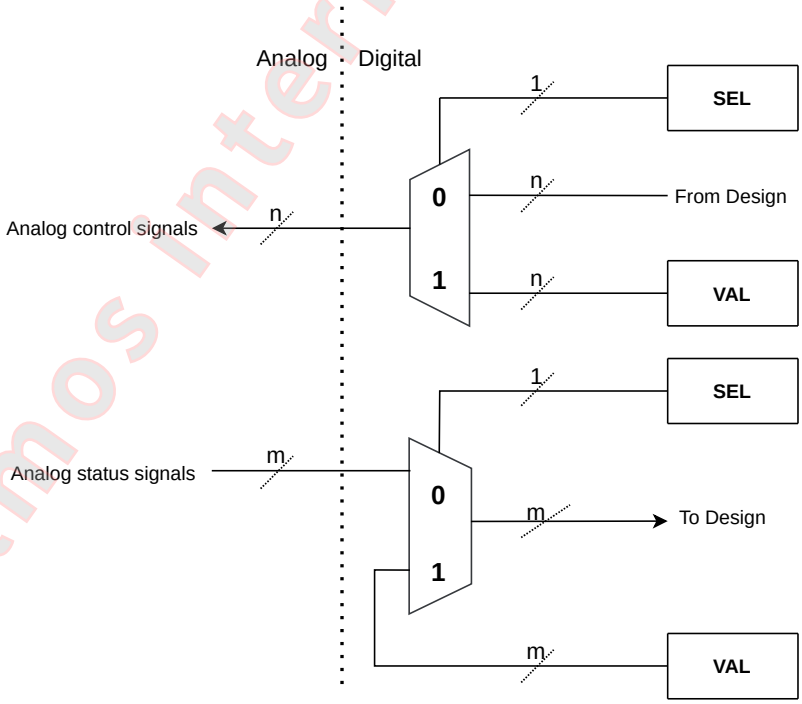

Figure 5: TMR_SEL and TMR_VAL multiplexer structure

Elmos internal copy by ASON

ELMOS CONFIDENTIAL - created by ASON on 2026-02-05 11:20 - no redistribution allowed

Control of a digital signal always consists of a pair:

	width	description
sel	always just one bit	give control of the signal to test logic
val	variable width	digital value to be used

The main goal of this structure is setting conditions to the IC, which is usually done by the digital system.

Advantages:

- avoids complex CPU/Bus access, bypass complex access chains or security walls
- control signals which are hard or not accessible in application (read-only, dynamic bits or registers, event driven settings, module in power down)
- safety for new products: redundant control if digital part doesn't work.

4.5.2.Design considerations

In the test concept phase each signal at the A2D/D2A interface has to be reviewed carefully. If a dedicated setup of each signal might be required and cannot be assured by the driving stage, the SEL/VAL mechanism should be added.
If applicative registers are available and the signal may be forced that way, the SEL/VAL mechanism should not be used to increase test coverage.
This DfT feature is good as backup-mask for lab evaluation in case of unexpected behavior. During production test it should be used as less as possible. Whenever possible, use functional registers to force the signals to avoid white spots.
Keep in mind that each SEL/VAL structure will influence the ATPG coverage. The scan concept has to be checked manually at each signal to suppress white spots.
Design considerations regarding register content:

- do not put SEL and VAL in one register: VAL changes more often than SEL.
- do not let any val (> 1 Bit) overlap to the next register.

4.5.3.Naming conventions

Each block which makes use of TMR_SEL_VAL shall have registers with the following names: TMR_SEL_<*Subblock*> and TMR_VAL_<*Subblock*>.
<*Subblock*> is optional and the label stands for subblock names within a module. <Subblock> naming shall be used whenever splitting up the register increases clarity.
Each block should combine the switches within its own register. There can also be registers in the global testlogic named TMR_SEL_<Subblock> and TMR_VAL_<Subblock> which are used to set global switches, which are not assigned to a single block.
To facilitate the usage of scripts the bit field names of the TMR_SEL register shall match the bit field name of the corresponding TMR_VAL register.

4.6.TMR_OUT

4.6.1.Structure

TMR_OUT controls an output multiplexer to observe internal digital signals at digital output pins. A hierarchical structure of the multiplexer has to be realized as shown in figure 6.

Elmos internal copy by ASON

ELMOS CONFIDENTIAL - created by ASON on 2026-02-05 11:20 - no redistribution allowed

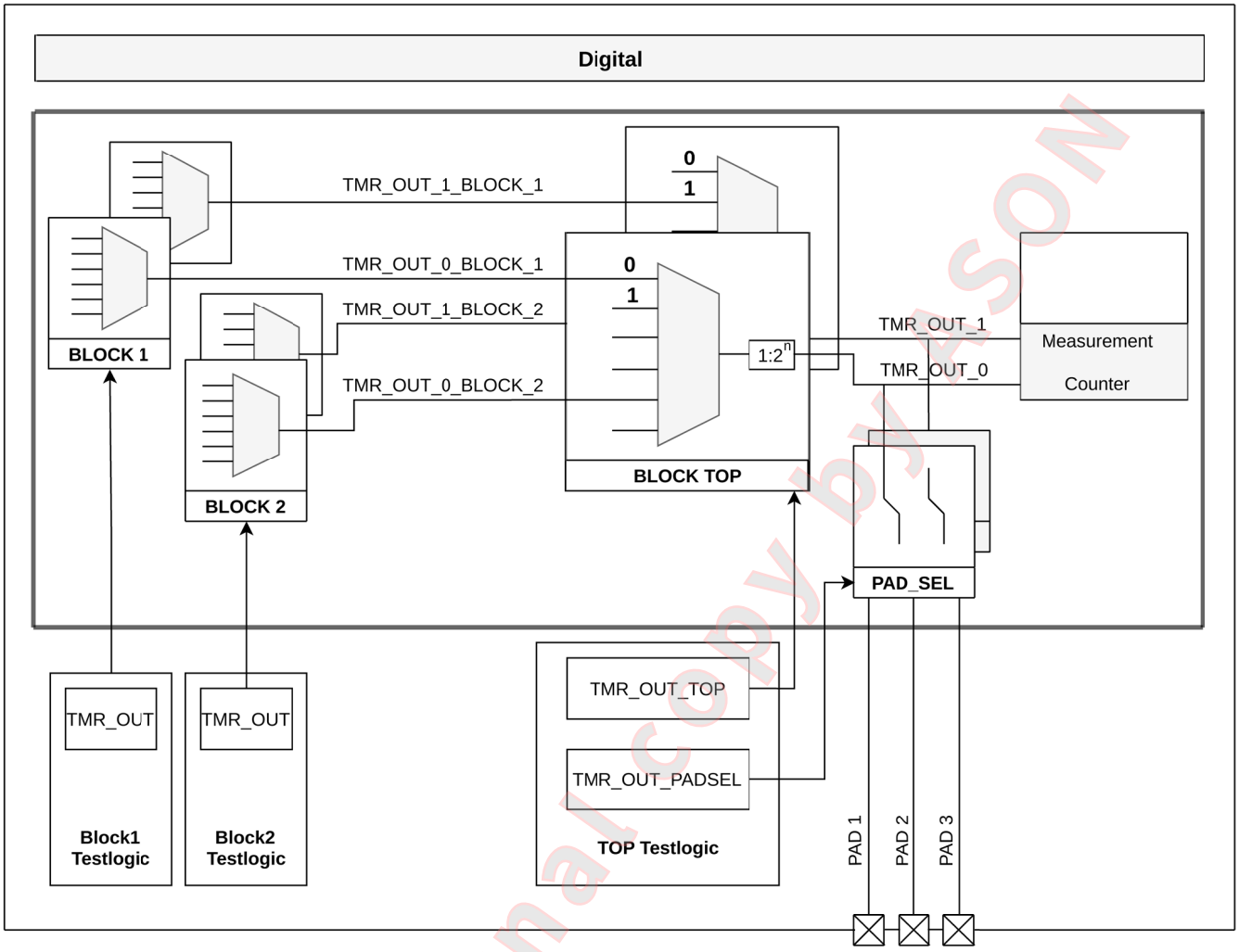

Figure 6: TMR_OUT structure

So each block owns an internal multiplexer to select one signal for observation. Comparable to TMR_ANA a top module is used to select the module for observation and enables possible signal adaption (e.g. clock divider).

Each device commonly contains two identical and independent TMR_OUT multiplexer structures to allow the observation of two signals at the same time.
The naming of the two structures is TMR_OUT_0 and TMR_OUT_1.
If useful, a device may also have more than two TMR_OUT paths.

Final routing from the TMR_OUT signal lines to any device pad is done using the PAD_SEL routing block. Here the applicative signal path of the pad is switched to TMR_OUT.

Beside this universal signal routing approach a measurement counter may be connected to the TMR_OUT lines to measure pulse-width or delays internally. This module is very useful to measure short pulses or critical timings without any signal influencing due to the pad routing.
The behavior of this measurement unit should be defined more deeply at one of the next projects requiring such functionality. For the first unified test mode approach this block is not required, therefore the description will follow in one of the next releases.

For controlling the top module structure the test mode registers TMR_OUT_0_TOP, TMR_OUT_1_TOP etc. are available containing following bits:

Elmos internal copy by ASON

ELMOS CONFIDENTIAL - created by ASON on 2026-02-05 11:20 - no redistribution allowed

Bit	Name	Description
[7..0]	sel	Select one module for observation at the corresponding output pin. 0: fix_value_0 1: fix_value_1 2 255: Block 1 .. N
[11..8]	clkdiv	Use programmable clock divider. 0 means: no clk divider used any value n (1..15): divide clock signal by 2^n
[15..12]	reserved	

The list of TMR_OUT signals in the description field of the “sel” bitfield shall follow the rule: <value> : <digital_signal_name>

The depth of the TMR_OUT multiplexer is project specific so the width of the corresponding bitfield shall be adapted. See next chapter for details.

Furthermore, global test mode registers TMR_OUT_0_PADSEL, TMR_OUT_1_PADSEL etc are available for defining the routing from the digital TMR_OUT signals to the PADs being used for digital test output.

Bit	Name	Description
0	<pad0>	Switch TMR_OUT to PAD0 as test signal output.
1	<pad1>	Switch TMR_OUT to PAD1 as test signal output.
2	<pad2>	Switch TMR_OUT to PAD2 as test signal output.
...	...	...

4.6.2.Design considerations

Keep depth of TMR_OUT muxer in mind. Especially for timing critical measurements (e.g. measurement of a delay path through a PHY interface) the depth of the TMR_OUT mux could have significant influence.

4.6.3.Naming conventions

Each sub module with included TMR_OUT logic shall contain a register with the name: TMR_OUT. This register shall contain the signal names of the TMR_OUT signals, one bitfield for each TMR_OUT path.
There are also two global registers TMR_OUT_0_TOP and TMR_OUT_1_TOP as well as TMR_OUT_0_PADSEL and TMR_OUT_1_PADSEL which are used to set global multiplexers as described above. If more than two TMR_OUT paths are implemented more registers have to be defined, respectively.

Elmos internal copy by ASON

ELMOS CONFIDENTIAL - created by ASON on 2026-02-05 11:20 - no redistribution allowed

4.7.TMR_IN

4.7.1.Structure

TMR_IN shall be used to route a digital input pin to some internal signal for stimuli. For example this is useful to test transceivers (LIN) accordingly by routing a pin to the LIN trx signal. This approach might be defined comparabley to the TMR_OUT structure (see Figure 7):

- connect pin to TMR_IN signal via PADSEL multiplexer
- connect block input to the required signal, disable original force line accordingly.

This structure needs comparable registers like TMR_OUT to set the path on toplevel and within the blocks. Also the usage of two or more input paths is useful if more than one signal has to be stimulated.

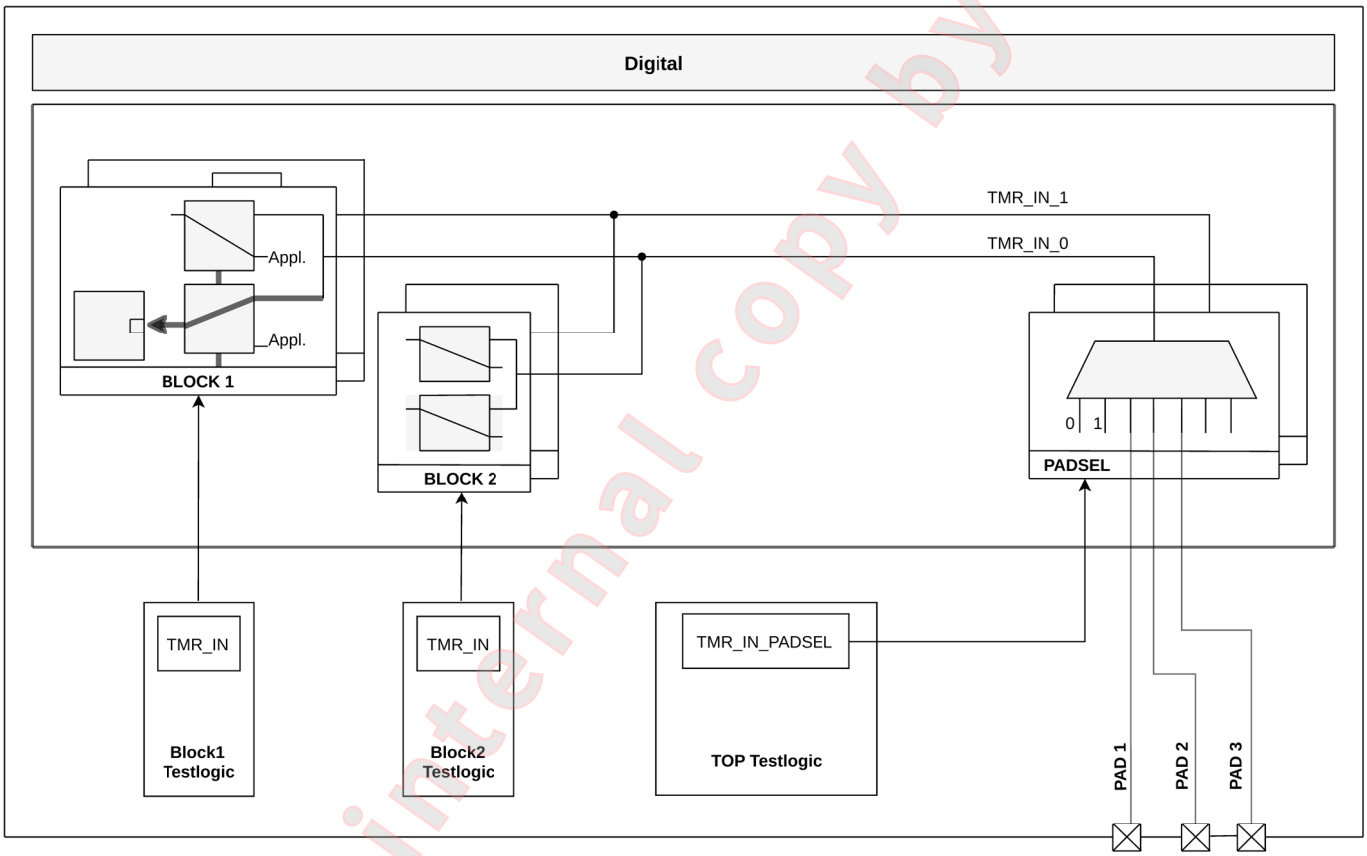

Figure 7: TMR_IN structure

4.7.2.Design considerations

Keep depth of TMR_IN muxer in mind. Especially for timing critical measurements (e.g. measurement of a delay path through a PHY interface) the depth of the TMR_IN MUX could have significant influence. Assure that no floating nodes may occur due to the structure. If TMR_IN is not used, the switches inside the application blocks connect to required force line. Within the TOP block they have to be set to some defined signal.

elmos internal copy by ASON

ELMOS CONFIDENTIAL - created by ASON on 2026-02-05 11:20 - no redistribution allowed

4.7.3.Naming conventions

Each sub module with included TMR_IN logic shall contain a register with the name: TMR_IN. This register shall contain the signal names of the TMR_IN signals.
There are also two global registers TMR_IN_0_PADSEL and TMR_IN_1_PADSEL which are used to set global multiplexers as described above.

The TMR_IN registers contain 1 Bit for each signal switch, for example:

Bit	Name	Description
0	<signal0>	Switch TMR_IN to signal 0 instead of using the applicative path.
1	<signal1>	Switch TMR_IN to signal 1 instead of using the applicative path.
2	<signal2>	Switch TMR_IN to signal 2 instead of using the applicative path.
...	...	...

Generally it is possible to route the TMR_IN path to several signals in parallel.

The TMR_IN_0_PADSEL and TMR_IN_1_PADSEL registers describe the required MUX setup:

Bit	Name	Description
[15..0]	sel	Select input pin as stimulation source for the TMR_IN bus. 0: fix value 0 1: fix value 1 others: PIN 1 - N

4.8.TMR_DIG

4.8.1.Structure

This TMR structure is used to control the behavior of the digital part on block level or on top level. If useful and required, the digital part of a block should contain a TMR_DIG register with corresponding bits to setup its behavior. Furthermore, a TMR_DIG_TOP register is used to setup global signals for the whole digital part.

Examples for TMR_DIG usage:

On digital block level	On digital top level
• Enable access to a normally locked memory range. • Disable write lock for dedicated registers. • Switch clock path to other signal e.g. TCK.	• Enable scan or iddq mode for digital part. • Control of bootloader behavior (e.g. to skip or exit sequences).

4.8.2.Design considerations

Reduce number of global control signals to have the possibility of forcing block-internal local modification, e.g. split a power down line to multiple block power down-signals. Those may individually

Elmos internal copy by ASON

ELMOS CONFIDENTIAL - created by ASON on 2026-02-05 11:20 - no redistribution allowed

be set to a defined value using TMR_DIG without the requirement for a global power down.

4.8.3.Naming conventions

Each sub module with included TMR_DIG logic shall contain a register with the name: TMR_DIG
There is also one global register TMR_DIG_TOP to set the digital behavior on top level as described above.

5. Work safety / emergency instructions

None

6. Documentation

Test modes and registers are documented in the EDF.

7. Related documents

LI “Development Glossar”
QM-No. 10LI0002

8. Appendix

None

Elmos internal copy by ASON

ELMOS CONFIDENTIAL - created by ASON on 2026-02-05 11:20 - no redistribution allowed